ZC0270

PATENTED

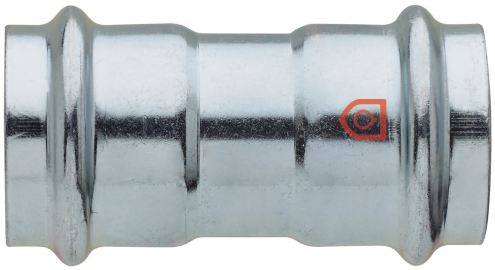

Technical specifications

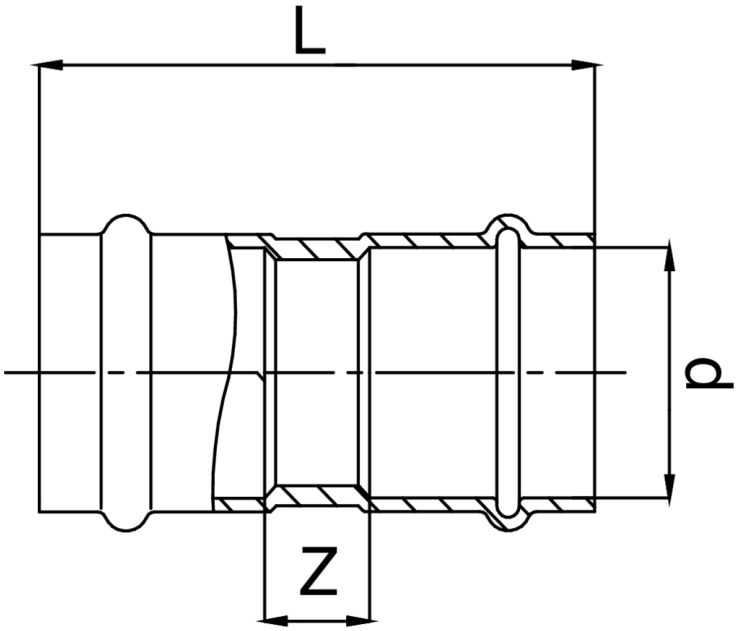

D	BAG	MASTER BOX	CODE	L	Z
12	10	300	ZC0270012012000	57	21
15	10	200	ZC0270015015000	60	16
18	10	150	ZC0270018018000	70	24
22	10	100	ZC0270022022000	72	24
28	10	50	ZC0270028028000	74	24
35	5	40	ZC0270035035000	76	24
42	5	25	ZC0270042042000	98	26
54	1	15	ZC0270054054000	107	27
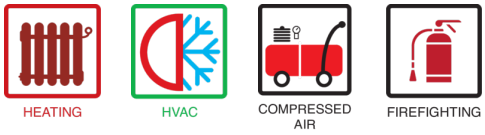
Applications