BONOMI GROUP

FRABO

frabo 5000

RJ5090

F solder/F press 90° elbow with O-ring.

Technical specifications

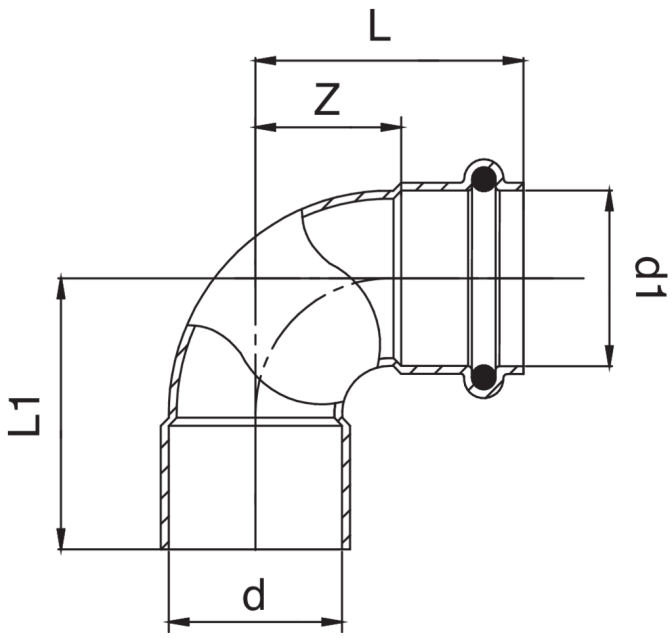

D X D1	BAG	MASTER BOX	CODE	L	L1	Z
32 x 32	10	50	RJ5090032032000	40	41	17
40 x 40	10	50	RJ5090040040000	51	48	21

Applications