frabo FRIO FR5090

F/F 90° elbow.

Technical specifications

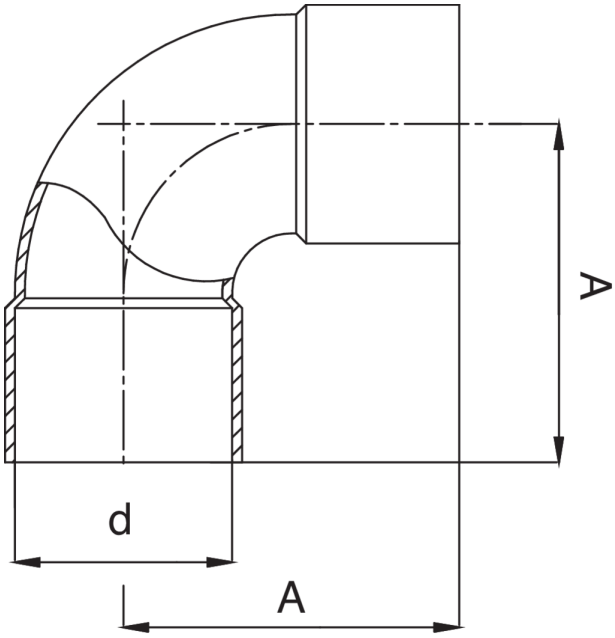

D	BAG	MASTER BOX	CODE	A
1/4"	10	300	FR5090A14A14000	14
3/8"	10	200	FR5090A38A38000	15,5
1/2"	10	300	FR5090A12A12000	18
5/8"	10	120	FR5090A58A58000	21
3/4"	10	200	FR5090A34A34000	26
7/8"	10	40	FR5090A78A78000	31
1"	10	40	FR5090B01B01000	32
1"1/8	5	50	FR5090B18B18000	39
1"1/4	5	50	FR5090B14B14000	38
1"3/8	5	35	FR5090B38B38000	44
1"5/8	5	20	FR5090B58B58000	50
2"1/8	1	25	FR5090C18C18000	62,5
2"5/8	1	20	FR5090C58C58000	76
3"1/8	1	8	FR5090D18D18000	91

Applications