RB3290

Male thread plug.

Technical specifications

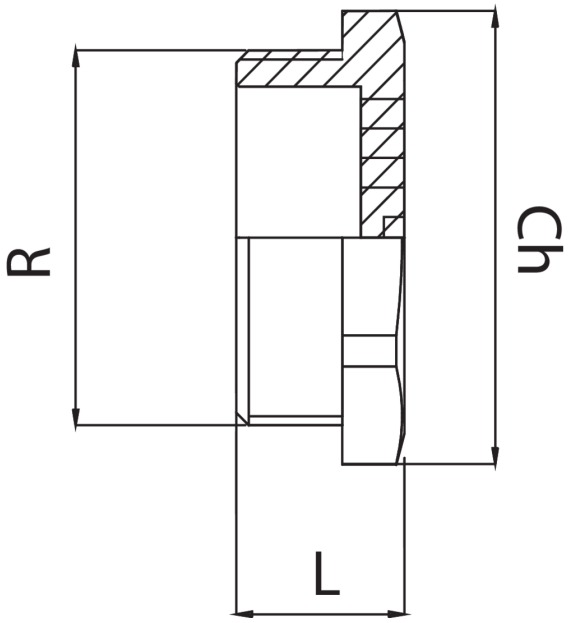

R	BAG	MASTER BOX	CODE	CH	L
1/4"	10	400	RB3290A14A14000	15	13
3/8"	10	200	RB3290A38A38000	19	14,5
1/2"	10	250	RB3290A12A12000	24	16
3/4"	10	150	RB3290A34A34000	30	18,5
1"	10	30	RB3290B01B01000	37	21
1"1/4	5	60	RB3290B14B14000	46	23,5
1"1/2	5	50	RB3290B12B12000	52	25,5
2"	1	40	RB3290C02C02000	65	26

Applications